METRIC PRECISION ORIFICES AND MINIATURE CHECK VALVE

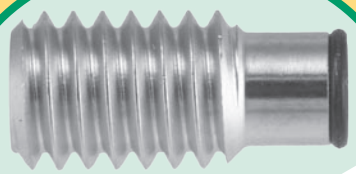

ZMNVC

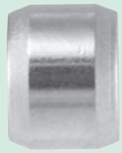

US - INSERT

This catalog has been superseded by the online catalog at www.okeefecontrols.com and is available for historical reference only

O'Keefe Controls Co.

CATALOG MD-2

MONROE, CT USA

Metal Orifice Assemblies

METRIC THREADED INSERTS

Description

Set screw style threaded orifice inserts can be installed in fittings, manifolds or custom parts to establish flow rates of liquids or gases. Standard size orifices range from .10 mm to 1.60 mm.

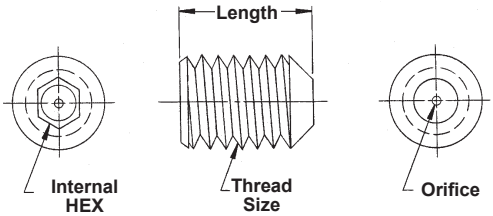

Type ZM

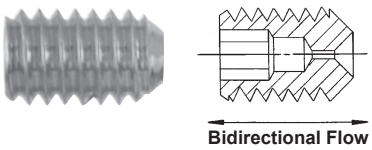

PART NUMBER SYSTEM

TYPE	—	ORIFICE SIZE NO.	—	THREAD SIZE	—	LENGTH NO.	—	MATERIAL
ZM								

Standard Sizes Size No.	Orifice Dia.* mm.	Standard Size Range	Thread Size	Length mm	No.	Material
4	.10	4-35	Thread Size M3 x .5 mm Hex Size 1.5 mm	4 mm	4	SS 18-8 SS
5	.13					
6	.15					
7	.18					
8	.20					
9	.23					
10	.26					
11	.28	4-35	Thread Size M4 x .7 mm Hex Size 2.0 mm	5 mm	5	
12	.31					
13	.33					
14	.36					
15	.38					
16	.41					
17	.43	4-63	Thread Size M5 x .8 mm Hex Size 2.5 mm	6 mm	6	
18	.46					
19	.48					
20	.51					
21	.53					
22	.56					
23	.58					
24	.61					
25	.63	4-63	Thread Size M6 x 1.0 mm Hex Size 3.0 mm	8 mm	8	
26	.66					
27	.69					
28	.71					
29	.74					
31	.79					
32	.81					
33	.84	4-63	Thread Size M8 x 1.25 mm Hex Size 4.0 mm	10 mm	10	
35	.89					
37	.94					
38	.97					
39	.99					
40	1.02					
41	1.04					
42	1.07	4-63	Thread Size M10 x 1.50 mm Hex Size 5.0 mm	12 mm	12	
43	1.09					
47	1.19					
52	1.32					
55	1.40					
60	1.52					
63	1.60					

Consult factory for larger orifice sizes.

EXAMPLES

	TYPE		SIZE NO.		THREAD SIZE		LENGTH NO.		MATERIAL
1.	**ZM** (Type ZM)	—	**10** (.26 mm diameter)	—	**M3**	—	**4** (4 mm length)	—	**SS** (Stainless Steel)
2.	**ZM** (Type ZM)	—	**31** (.79 mm diameter)	—	**M6**	—	**8** (8 mm length)	—	**SS** (Stainless Steel)

O'Keefe Controls Co. P.O. BOX Q • TRUMBULL, CT USA 06611 • PHONE (203) 261-6711 • TOLL FREE PHONE (800) 533-3285 • FAX (203) 261-8331

© O'KEEFE CONTROLS CO. • 2010 ALL RIGHTS RESERVED

e-mail ca@okcc.com • website www.okcc.com

Metal Orifice Assemblies

METRIC THREADED INSERTS - NOSE SEALS

Description

This type precision orifice includes an o-ring for sealing against a flat surface. The set screw style can be installed in fittings, manifolds and custom parts for accurate flow rate control of liquids or gases.

Specifications

Thread Sizes – M3.5 x 0.6, M5 x 0.8, M6 x 1, and M8 x 1.25**.**

Flow Direction – Suitable for flow in either direction.

Flow – See flow chart for air flow on last page.

K_V Range – .00030 to .171

Orifice Diameter Accuracy – ± .013 mm

Fluid Media – Air, Water, Gases and Liquids compatible with materials of construction.

Dimensions – See drawings this page.

Materials of Construction –
Brass or 303 SS Body.
Fluorocarbon or Nitrile O-ring

Maximum Operating Pressure –
1400 kPa

Maximum Operating Temperature –
Nitrile O-ring 65 ºC.
Fluorocarbon O-ring 120 ºC.

Size Number	Orifice Dia. (mm)	Size Number Range
4	.10	
5	.13	
6	.15	
7	.18	
8	.20	
9	.23	
10	.26	**Thread**
11	.28	**M3.5 x 0.6**
12	.31	4-31
13	.33	
14	.36	
15	.38	
16	.41	
17	.43	
18	.46	
19	.48	**Thread**
20	.51	**M5 x 0.8**
21	.53	4-52
22	.56	
23	.58	
24	.61	
25	.63	
26	.66	
27	.69	
28	.71	**Thread**
29	.74	**M6 x 1**
31	.79	4-81
32	.81	
33	.84	
35	.89	
37	.94	
38	.97	**Thread**
39	.99	**M8 x 1.25**
40	1.02	4-94
41	1.04	
42	1.07	
43	1.09	
47	1.19	
52	1.32	
55	1.40	
60	1.52	
63	1.60	
67	1.70	
70	1.78	
73	1.85	
76	1.93	
79	2.01	
81	2.06	
86	2.18	
89	2.26	
94	2.39	

Construction

Type ZMNS

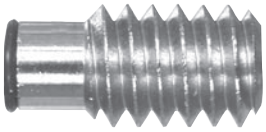

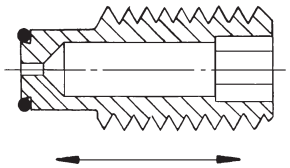

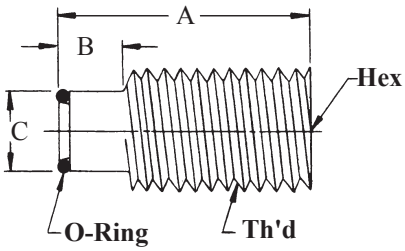

Dimensions - mm

Th'd	A	B	C	Hex
M3.5	7.87	1.97	2.29	2
M5.0	10.8	2.57	3.10	2.5
M6.0	12.7	3.81	4.45	3
M8.0	16.3	4.83	5.59	4

Installation

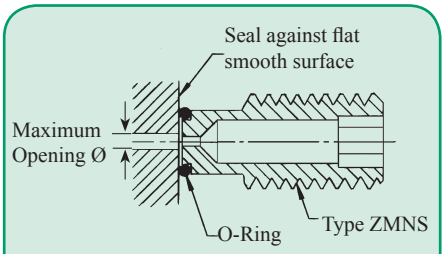

Dimensions - mm

Thread	Maximum Opening Ø
M3.5	1.20
M5.0	1.57
M6.0	2.41
M8.0	3.18

Part Numbers

The complete part number for an orifice assembly includes Type, Size Number, Thread Size, Body Material and O-Ring Material.

BN - Nitrile
V - Fluorocarbon

EXAMPLES

Type	Size Number	Thread Size	Body Material	O-Ring	Part Number
ZMNS	10(.26 mm)	M3.5	BR (Brass)	BN	ZMNS-10-M3.5-BR-BN
ZMNS	20(.51 mm)	M6	SS (303 SS)	V	ZMNS-20-M6- SS-V

O'Keefe Controls Co. P.O. BOX Q • TRUMBULL, CT USA 06611 • PHONE (203) 261-6711 • TOLL FREE PHONE (800) 533-3285 • FAX (203) 261-8331
e-mail ca@okcc.com • website www.okcc.com

© O'KEEFE CONTROLS CO. • 2010 ALL RIGHTS RESERVED

Metal Orifice Assemblies

Description

The inserts shown on this page are designed to press-fit into openings accurately machined in fittings, manifolds and custom parts. There is a choice of insert sizes and materials of construction.

Applications

The inserts can be used with a wide variety of fittings by accurately machining the inside of the fitting. The orifice is then pressed into the fitting for control of the flow rate of liquids or gases.

Manifolds or other custom assemblies that require flow rate control of fluids can be accurately machined to press fit the orifices shown on this page and on page 5.

General Specifications

Maximum Operating Pressure

Insert Only *(see exceptions)*

Brass – 13,790 kPag
303SS – 27,580 kPag
316SS – 27,580 kPag

exceptions IAS, US
Maximum Differential Pressure – 700 kPad

Flow – See flow chart for air flow on page 7.

Orifice Diameters – .10 mm to 3.18 mm. See chart at right. Consult factory for other sizes.

Orifice Diameter Accuracy – ±.013 mm

K_V Range – .0003 to .32 - See page 7.

Fluid Media – Air, Water, Gases and Liquids compatible with materials of construction.

Dimensions – See drawings in right hand column of this page and on page 5.

Press Fit – See drawings in right hand column of this page and on page 5.

Materials

Type IA, AM, IF	– Brass or 303 SS
Type IAS	– Brass, 304 SS Screen
Type IB, IE, IJ IK, U	– 303 SS
Type IL	– Brass
Type IC, ID	– 316 SS
Type US	– 303 SS, 304 SS Screen

INSERTS

Size Number	Orifice Dia. mm	Size Number Range
4	.10	
5	.13	
6	.15	
7	.18	
8	.20	
9	.23	
10	.26	**Type AM**
11	.28	4-35
12	.31	
13	.33	**Type IA**
14	.36	4-63
15	.38	
16	.41	
17	.43	**Type IAS**
18	.46	4-35
19	.48	
20	.51	**Type IB**
21	.53	4-25
22	.56	
23	.58	
24	.61	**Type IC**
25	.63	4-63
26	.66	
27	.69	**Type ID**
28	.71	4-125
29	.74	
31	.79	
32	.81	**Type IE**
33	.84	4-35
35	.89	
37	.94	**Type IF**
38	.97	4-63
39	.99	
40	1.02	
41	1.04	**Type IJ**
42	1.07	4-125
43	1.09	
47	1.19	
52	1.32	**Type IK**
55	1.40	4-20
60	1.52	
63	1.60	**Type IL**
67	1.70	4-35
70	1.78	
73	1.85	
76	1.93	**Type U**
79	2.01	4-63
81	2.06	
86	2.18	**Type US**
89	2.26	4-35
94	2.39	
96	2.44	
100	2.54	
104	2.64	
109	2.77	
113	2.87	
120	3.05	
125	3.18	

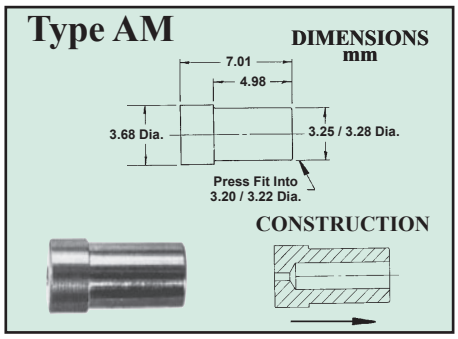

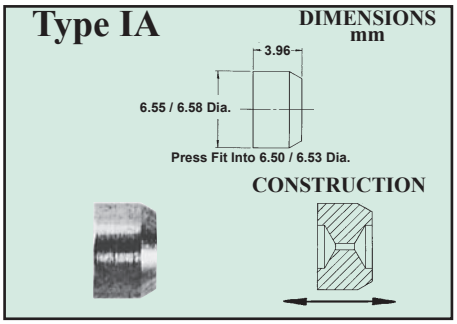

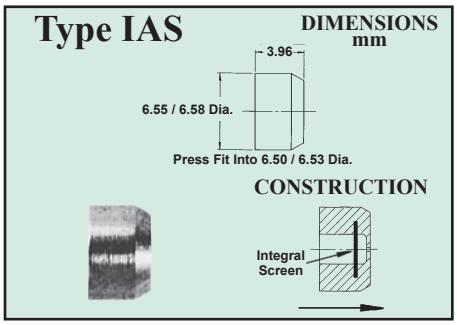

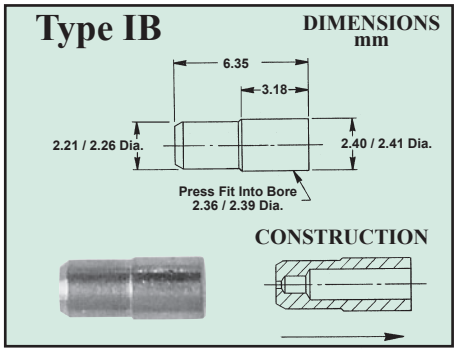

Custom Inserts

Where quantity requirements exceed 1000 pieces, custom inserts can be manufactured in brass, stainless steel, or special materials to the dimensions required. Provide a dimension drawing, material specifications, and quantities to our technical service department to obtain price and delivery quotations.

O'Keefe Controls Co. P.O. BOX Q • TRUMBULL, CT USA 06611 • PHONE (203) 261-6711 • TOLL FREE PHONE (800) 533-3285 • FAX (203) 261-8331
e-mail ca@okcc.com • website www.okcc.com
© O'KEEFE CONTROLS CO. • 2010 ALL RIGHTS RESERVED

Metal Orifice Assemblies

INSERTS

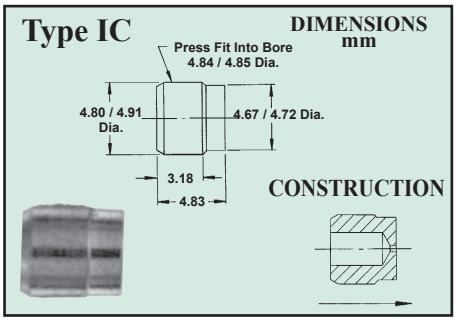

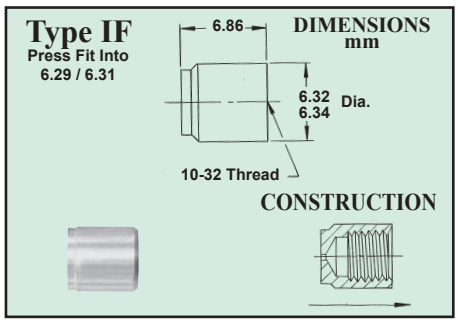

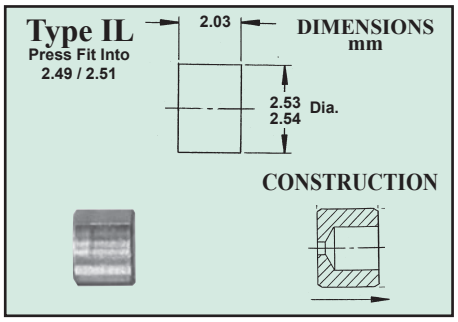

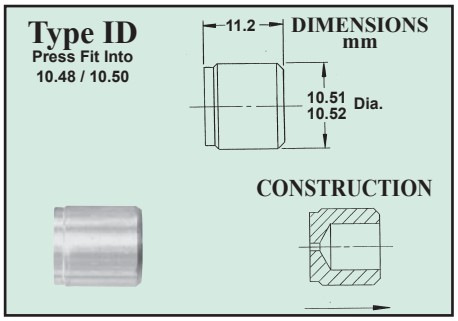

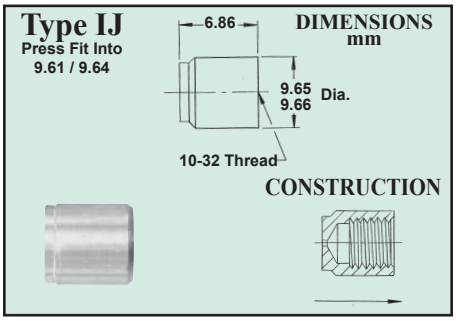

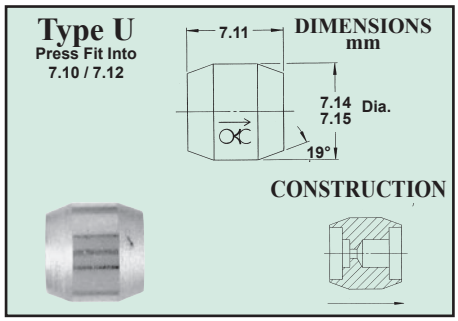

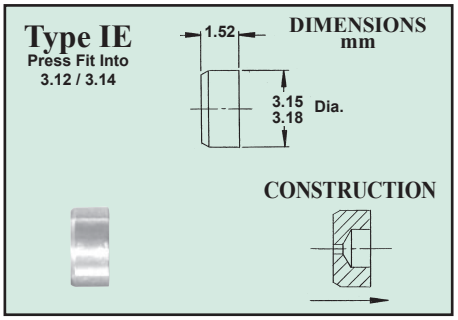

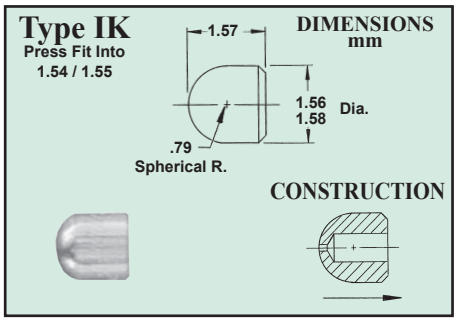

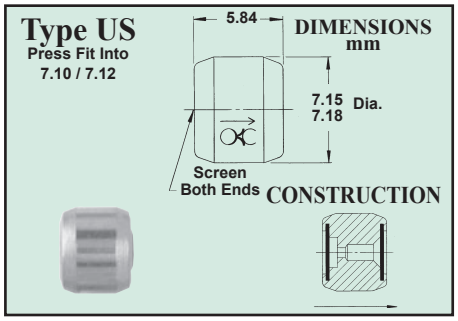

Part Numbers

The complete part number for an orifice assembly includes Type, Size Number, Body Material and Options.

EXAMPLES

Type	Size Number	Body Material	Options	Part Number
IB	6 (.15 mm)	SS	–	IB-6-SS
AM	10 (.26 mm)	SS	–	AM-10-SS
IA	20 (.51 mm)	Brass	–	IA-20-BR

Orifice Diameters

See chart on page 4 for sizes available for each insert type. Consult factory for other sizes.

Flow Direction

Metal orifice assemblies can be used for flow in either direction. The data on page 7 is for a flow direction as shown in the right column on page 4 and throughout this page.

O'Keefe Controls Co. P.O. BOX Q • TRUMBULL, CT USA 06611 • PHONE (203) 261-6711 • TOLL FREE PHONE (800) 533-3285 • FAX (203) 261-8331
e-mail ca@okcc.com • website www.okcc.com

© O'KEEFE CONTROLS CO. • 2010 ALL RIGHTS RESERVED

Check Valves

METRIC ECONOMY LINE

Description

This miniature check valve line employs a free floating stainless steel or elastomeric ball, which allows free flow in one direction; reverse flow is prevented. The valves are suitable for air, water, inert gases, light oil and liquids compatible with the materials of construction. The valves are fast acting and are suitable for long life applications.

Features

- All metal construction option
- Long life operation
- Low cost

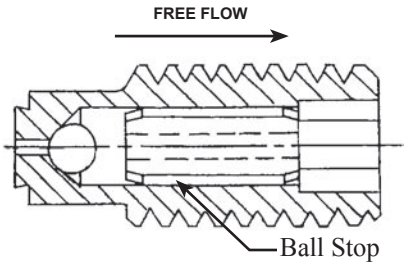

Symbol-Check Valve

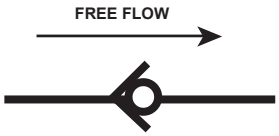

General Specifications

Materials of Construction

Body – Brass or 303 SS

Ball Stop – Brass or 303 SS

Ball - Material options:

Size	440C-SS (SS)	Flouro-carbon (V)	Nitrile (BN)
M3.5	✓		
M5	✓		✓
M6	✓	✓	
M8	✓	✓	✓

Maximum Temperature

Nitrile – 65°C

Fluorocarbon - 120°C

Maximum Operating Pressure

Type ZMC

Brass Body– 3500 kPa (SS Ball)

SS Body– 7000 kPa (SS Ball)

Brass or SS Body- 875 kPa (elastomeric ball)

Type ZMNBC, ZMNVC

1400 kPa (SS Ball)

875 kPa (elastomeric ball)

Seat Leakage

SS Ball

20 sccm (max) air flow at 175 kPa

Nitrile or Fluorocarbon Ball

0 sccm @ 350 kPa (air flow)

<5 sccm @ 175 kPa (air flow)

Thread Sealant

For type ZMC straight threads use Loctite 542 thread sealant or equal.

Construction

Types ZMNBC, ZMNVC

Type ZMC

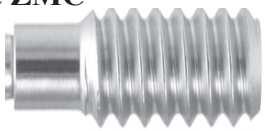

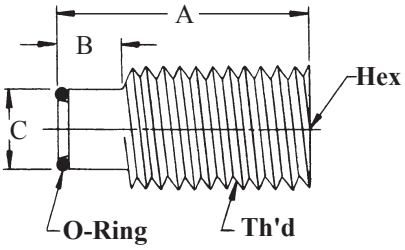

Dimensions - mm

Th'd	A	B	C	Hex
M3.5	7.87	1.97	2.29	2
M5.0	10.8	2.57	3.10	2.5
M6.0	12.7	3.81	4.45	3
M8.0	16.3	4.83	5.59	4

Flow Capacity

(air flow)

Type	Size	K_v	(SLPM) @ 350 kPa*
ZMC	M3.5	.008	9
ZMC	M5	.017	20
ZMC	M6	.065	80
ZMC	M8	.100	130

* data from flow chart

Part Numbers

The complete part number for an orifice assembly includes Type, Fixed Numbers, Thread Size, Body/Ball Stop Material and Ball Material.

(Fixed Numbers are the valve body orifice and differential pressure above which the valve will allow flow in the free flow direction.)

EXAMPLES

Type	Thread Size	Body/ Ball Stop	Ball Material	Part Number Type | Fixed | Size | B/BS | Ball
ZMC (no nose seal)	M3.5	BR (Brass)	SS (440C)	ZMC - 20 - 0 -M3.5 - BR - SS
ZMNBC (nose seal-Nitrile)	M5	SS (303 SS)	B (Nitrile)	ZMNBC - 31 - 0 - M5 - SS - B
ZMNVC (nose seal - Fluorocarbon)	M6	BR (Brass)	V (Fluorocarbon)	ZMNVC - 62 - 0 - M6 - BR - V
ZMC (no nose seal)	M8	SS (303SS)	SS (440C)	ZMC - 94 - 0 - M8 - SS - SS

Installation

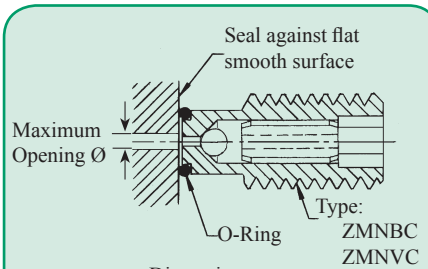

Dimensions - mm

Thread	Maximum Opening Ø
M3.5 x 0.6 mm	1.20
M5.0 x 0.8 mm	1.57
M6.0 x 1 mm	2.41
M8.0 x 1.25 mm	3.18

O'Keefe Controls Co. P.O. BOX Q • TRUMBULL, CT USA 06611 • PHONE (203) 261-6711 • TOLL FREE PHONE (800) 533-3285 • FAX (203) 261-8331

© O'KEEFE CONTROLS CO. • 2010 ALL RIGHTS RESERVED

e-mail ca@okcc.com • website www.okcc.com

Metal Orifice Air Flow – SLPM

Orifice Diameter																															
Inches		0.004	0.005	0.006	0.007	0.008	0.009	0.010	0.011	0.012	0.013	0.014	0.015	0.016	0.017	0.018	0.019	0.020	0.021	0.022	0.023	0.024	0.025	0.026	0.027	0.028	0.029	0.031	0.032	0.033
mm		0.10	0.13	0.15	0.18	0.20	0.23	0.26	0.28	0.31	0.33	0.36	0.38	0.41	0.43	0.46	0.48	0.51	0.53	0.56	0.58	0.61	0.63	0.66	0.69	0.71	0.74	0.79	0.81	0.84
Size Number		**4**	**5**	**6**	**7**	**8**	**9**	**10**	**11**	**12**	**13**	**14**	**15**	**16**	**17**	**18**	**19**	**20**	**21**	**22**	**23**	**24**	**25**	**26**	**27**	**28**	**29**	**31**	**32**	**33**
C_V		0.00035	0.00061	0.00086	0.0012	0.0015	0.0019	0.0025	0.0028	0.0034	0.0038	0.0043	0.0050	0.0055	0.0067	0.0073	0.0080	0.0088	0.0096	0.011	0.012	0.013	0.014	0.016	0.017	0.018	0.019	0.022	0.024	0.025
K_V		0.00030	0.00052	0.00073	0.0010	0.0013	0.0016	0.0021	0.0024	0.0029	0.0032	0.0037	0.0043	0.0047	0.0057	0.0062	0.0068	0.0075	0.0082	0.0094	0.010	0.011	0.012	0.014	0.0145	0.015	0.016	0.019	0.020	0.021
Supply Pressure	**kPag**	**psig**																												
	6.9	1	0.035	0.064	0.086	0.127	0.170	0.226	0.280	0.308	0.398	0.45	0.52	0.61	0.66	0.77	0.86	0.96	1.05	1.13	1.29	1.41	1.54	1.67	1.91	1.95	2.21	2.39	2.65	2.88	3.03
	34.5	5	0.09	0.16	0.21	0.30	0.40	0.52	0.65	0.71	0.92	1.06	1.21	1.41	1.54	1.76	1.98	2.22	2.47	2.65	2.97	3.24	3.53	3.83	4.34	4.44	4.94	5.31	5.86	6.42	6.80
	69.0	10	0.12	0.22	0.31	0.43	0.57	0.74	0.93	1.01	1.29	1.48	1.68	1.95	2.01	2.26	2.54	2.83	3.16	3.53	4.33	4.75	5.18	5.55	6.15	6.43	7.18	7.83	8.63	9.40	9.98
	103.4	15	0.16	0.28	0.39	0.54	0.72	0.93	1.17	1.26	1.62	1.85	2.10	2.44	2.50	2.85	3.23	3.57	4.01	4.41	5.35	5.93	6.43	6.95	7.58	7.95	8.78	9.58	10.6	11.6	12.3
	137.9	20	0.19	0.33	0.46	0.65	0.85	1.10	1.38	1.49	1.92	2.19	2.49	2.87	2.97	3.40	3.86	4.26	4.84	5.22	6.35	6.95	7.58	8.15	8.90	9.28	10.3	11.2	12.4	13.5	14.3
	172.4	25	0.22	0.39	0.53	0.75	0.98	1.27	1.59	1.71	2.20	2.50	2.86	3.28	3.42	3.92	4.45	4.91	5.59	6.01	7.30	7.95	8.65	9.38	10.2	10.7	11.7	12.8	14.2	15.4	16.3
	206.9	30	0.25	0.44	0.60	0.85	1.12	1.43	1.80	1.93	2.47	2.82	3.21	3.69	3.87	4.43	5.03	5.56	6.33	6.81	8.23	8.98	9.75	10.6	11.5	12.0	13.2	14.4	15.9	17.3	18.4
	275.8	40	0.30	0.54	0.74	1.05	1.38	1.77	2.21	2.37	3.04	3.45	3.93	4.51	4.78	5.47	6.21	6.85	7.81	8.42	10.1	11.0	12.0	13.0	14.1	14.7	16.1	17.5	19.4	21.1	22.5
	344.8	50	0.36	0.65	0.88	1.26	1.65	2.10	2.62	2.80	3.58	4.07	4.64	5.31	5.70	6.51	7.40	8.15	9.26	10.0	11.9	13.0	14.2	15.4	16.6	17.3	19.0	20.7	22.9	25.0	26.6
	413.7	60	0.42	0.75	1.02	1.46	1.91	2.42	3.02	3.23	4.13	4.70	5.34	6.13	6.61	7.56	8.58	9.46	10.7	11.6	13.8	15.0	16.4	17.7	19.2	20.0	21.9	23.8	26.4	28.8	30.7
	482.7	70	0.48	0.86	1.16	1.67	2.17	2.75	3.43	3.66	4.68	5.32	6.05	6.96	7.53	8.61	9.77	10.8	12.2	13.2	15.6	17.0	18.5	20.1	21.7	22.7	24.8	27.0	30.0	32.7	34.9
	551.6	80	0.54	0.96	1.30	1.87	2.43	3.08	3.83	4.09	5.23	5.95	6.77	7.79	8.46	9.67	11.0	12.1	13.7	14.9	17.5	19.0	20.7	22.5	24.2	25.3	27.7	30.2	33.6	36.7	39.0
	620.6	90	0.60	1.07	1.44	2.08	2.69	3.40	4.23	4.51	5.78	6.58	7.49	8.62	9.38	10.7	12.2	13.4	15.2	16.5	19.3	21.0	22.9	24.9	26.8	28.0	30.7	33.5	37.2	40.6	43.2
	689.5	100	0.66	1.17	1.58	2.28	2.95	3.72	4.63	4.94	6.33	7.22	8.21	9.46	10.3	11.8	13.4	14.7	16.6	18.0	21.1	23.0	25.1	27.4	29.4	30.8	33.7	36.8	40.9	44.6	47.5
Vacuum Level	**mm Hg**	**in. Hg**																													
	127	5	0.053	0.096	0.129	0.191	0.253	0.332	0.406	0.450	0.582	0.661	0.773	0.899	0.977	1.14	1.28	1.41	1.55	1.70	1.90	2.10	2.30	2.48	2.74	2.83	3.16	3.41	3.78	4.12	4.32
	254	10	0.069	0.124	0.168	0.246	0.324	0.421	0.519	0.564	0.730	0.834	0.972	1.12	1.24	1.41	1.58	1.79	1.96	2.18	2.44	2.68	2.89	3.13	3.44	3.58	4.00	4.30	4.77	5.16	5.43
Choked Flow	381	15	0.075	0.134	0.185	0.268	0.351	0.455	0.566	0.614	0.792	0.902	1.07	1.22	1.35	1.55	1.75	1.94	2.19	2.32	2.61	2.85	3.12	3.34	3.65	3.78	4.20	4.51	5.05	5.45	5.72
Choked Flow	508	20	0.075	0.134	0.185	0.268	0.351	0.455	0.566	0.614	0.792	0.902	1.07	1.22	1.35	1.55	1.75	1.94	2.19	2.32	2.61	2.85	3.12	3.34	3.65	3.78	4.20	4.51	5.05	5.45	5.72
Choked Flow	762	30	0.075	0.134	0.185	0.268	0.351	0.455	0.566	0.614	0.792	0.902	1.07	1.22	1.35	1.55	1.75	1.94	2.19	2.32	2.61	2.85	3.12	3.34	3.65	3.78	4.20	4.51	5.05	5.45	5.72

Orifice Diameter																															
Inches		0.035	0.037	0.038	0.039	0.04	0.041	0.042	0.043	0.047	0.052	0.055	0.06	0.063	0.067	0.07	0.073	0.076	0.079	0.081	0.086	0.089	0.094	0.096	0.1	0.104	0.109	0.113	0.12	0.125
mm		0.89	0.94	0.97	0.99	1.02	1.04	1.07	1.09	1.19	1.32	1.40	1.52	1.60	1.70	1.78	1.85	1.93	2.01	2.06	2.18	2.26	2.39	2.44	2.54	2.64	2.77	2.87	3.05	3.18
Size Number		**35**	**37**	**38**	**39**	**40**	**41**	**42**	**43**	**47**	**52**	**55**	**60**	**63**	**67**	**70**	**73**	**76**	**79**	**81**	**86**	**89**	**94**	**96**	**100**	**104**	**109**	**113**	**120**	**125**
C_V		0.028	0.031	0.032	0.033	0.036	0.038	0.039	0.041	0.048	0.059	0.068	0.081	0.088	0.1	0.11	0.12	0.13	0.14	0.15	0.17	0.18	0.20	0.21	0.23	0.25	0.27	0.31	0.34	0.37
K_V		0.024	0.026	0.027	0.028	0.031	0.032	0.033	0.035	0.041	0.050	0.058	0.069	0.075	0.085	0.094	0.10	0.11	0.12	0.13	0.145	0.15	0.17	0.18	0.20	0.21	0.23	0.26	0.29	0.32
Supply Pressure	**kPag**	**psig**																												
	6.9	1	3.48	3.83	4.13	4.46	4.6	4.67	4.99	5.36	6.43	8.04	9.4	11.2	12.2	14.2	15.9	16.9	18.5	20.3	21.7	23.5	25.4	28.4	30.1	32.9	35.5	39.6	43.1	47.8	50.1
	34.5	5	7.67	8.48	9.09	9.7	10.2	10.6	11.3	12.1	14.2	17.6	20.3	23.9	26.1	30.3	33.8	36.1	39.4	43.1	46	51.1	54.9	61.9	65	70.8	76.6	84.8	92.1	102	108
	69.0	10	10.6	11.8	12.5	13.6	14.4	14.8	15.6	16.8	19.4	24.5	27.1	32.2	35.2	40.7	45.6	48.5	52.9	57.3	61.6	67.9	72.3	81	85.5	92.3	102	112	118	135	148
	103.4	15	13.1	14.5	15.4	16.7	17.7	18.2	19.1	20.4	23.6	29.7	32.9	39	42.6	49.3	55.3	58.8	64	69.4	74.5	82.1	87.3	97.8	103	111	123	135	143	163	178
	137.9	20	15.3	17	18.1	19.6	20.9	21.4	22.5	24	27.7	35	38.7	45.9	50.1	58	65	69	75.3	81.4	87.3	95.6	102	114	121	130	144	158	167	190	210
	172.4	25	17.7	19.6	20.8	22.6	24	24.7	25.9	27.6	31.9	40.3	44.6	52.8	57.7	66.7	74.7	79.3	86.4	93.5	100	110	117	131	138	149	164	180	191	219	241
	206.9	30	20	22.2	23.6	25.6	27.2	28	29.4	31.3	36	45.6	50.4	59.7	65.2	75.4	84.3	89.5	97.4	105	113	125	132	148	156	168	185	204	216	248	273
	275.8	40	24.8	27.4	31.7	31.6	33.6	34.6	36.3	38.7	44.5	56.3	62.2	73.6	80.3	92.7	104	110	120	129	139	153	162	181	191	207	228	251	267	306	337
	344.8	50	29.5	32.6	34.8	37.6	40.1	41.3	43.3	46	52.9	66.9	74	87.4	95.4	110	123	131	142	153	164	181	192	215	227	247	272	299	317	364	401
	413.7	60	34.3	38	40.6	43.8	46.7	48.1	50.3	53.5	61.5	77.7	85.8	101	110	127	142	151	164	177	189	210	223	250	264	286	315	347	368	422	465
	482.7	70	39.2	43.3	46.3	50	53.3	55	57.4	61	70	88.4	97.6	115	126	145	162	171	186	202	216	240	254	285	301	327	360	396	421	482	531
	551.6	80	44	48.7	52.1	56.2	60	61.9	64.5	68.5	78.6	99.1	109	129	141	162	181	191	209	227	242	269	285	320	338	367	404	445	472	541	596
	620.6	90	50	54.2	57.8	62.4	66.7	68.9	71.5	76	87.2	109	121	143	156	179	200	211	231	251	268	298	316	354	374	406	447	492	522	598	660
	689.5	100	53.9	59.6	63.7	68.7	73.5	77.3	78.6	83.5	95.8	120	133	156	171	196	221	234	255	277	296	329	349	392	413	449	494	544	578	662	729
Vacuum Level	**mm Hg**	**in. Hg**																													
	127	5	4.92	5.4	5.81	6.29	6.76	6.82	7.29	7.67	9.08	11.3	12.4	14.8	17.1	20	22.5	23.9	26	28.3	30.2	33.2	35.9	40.1	41.8	45.3	49	53.9	57.9	65.3	70.9
	254	10	6.18	6.78	7.29	7.85	8.31	8.5	9.08	9.58	11.1	13.9	15.4	18.2	21.2	24.4	27.2	29.9	32.5	35.3	37.7	41.5	44.8	50	52.1	56.6	61.2	67.2	72.2	81.4	88.4
Choked Flow	381	15	6.5	7.17	7.63	8.22	8.66	8.87	9.46	10	11.6	14.4	15.9	18.6	22.1	25.5	28.4	31.2	33.9	36.8	39.4	43.3	46.7	52.1	54.4	59	63.8	70.1	75.3	84.9	92.2
Choked Flow	508	20	6.5	7.17	7.63	8.22	8.66	8.87	9.46	10	11.6	14.4	15.9	18.6	22.1	25.5	28.4	31.2	33.9	36.8	39.4	43.3	46.7	52.1	54.4	59	63.8	70.1	75.3	84.9	92.2
Choked Flow	762	30	6.5	7.17	7.63	8.22	8.66	8.87	9.46	10	11.6	14.4	15.9	18.6	22.1	25.5	28.4	31.2	33.9	36.8	39.4	43.3	46.7	52.1	54.4	59	63.8	70.1	75.3	84.9	92.2

Standard Conditions: 21.1°C, 101.3 kPa / 70°F, 14.7 psia

SLPM – Standard Liters Per Minute

Above data obtained with Type B restrictor. Flow rates for other metal restrictors are essentially the same as for Type B. Above data supercedes previous publications.

O'Keefe Controls Co.
P.O. BOX Q • TRUMBULL, CONNECTICUT 06611 USA • PHONE (203) 261-6711 • TOLL FREE PHONE (800) 533-3285 • FAX (203) 261-8331
© O'KEEFE CONTROLS CO. • 2008 ALL RIGHTS RESERVED
• e-mail ca@okcc.com • website www.okcc.com

Metal Orifice Water Flow – Liters/minute

Orifice Diameter Inches	0.004	0.005	0.006	0.007	0.008	0.009	0.010	0.011	0.012	0.013	0.014	0.015	0.016	0.017	0.018	0.019	0.020	0.021	0.022	0.023	0.024	0.025	0.026	0.027	0.028	0.029	0.031	0.032	0.033
mm	0.10	0.13	0.15	0.18	0.20	0.23	0.26	0.28	0.31	0.33	0.36	0.38	0.41	0.43	0.46	0.48	0.51	0.53	0.56	0.58	0.61	0.63	0.66	0.69	0.71	0.74	0.79	0.81	0.84
Size Number	**4**	**5**	**6**	**7**	**8**	**9**	**10**	**11**	**12**	**13**	**14**	**15**	**16**	**17**	**18**	**19**	**20**	**21**	**22**	**23**	**24**	**25**	**26**	**27**	**28**	**29**	**31**	**32**	**33**
C_V	0.00035	0.00061	0.00086	0.0012	0.0015	0.0019	0.0025	0.0028	0.0034	0.0038	0.0043	0.0050	0.0055	0.0067	0.0073	0.0080	0.0088	0.0096	0.011	0.012	0.013	0.014	0.016	0.017	0.018	0.019	0.022	0.024	0.025
K_V	0.00030	0.00052	0.00073	0.0010	0.0013	0.0016	0.0021	0.0024	0.0029	0.0032	0.0037	0.0043	0.0047	0.0057	0.0062	0.0068	0.0075	0.0082	0.0094	0.010	0.011	0.012	0.014	0.0145	0.015	0.016	0.019	0.020	0.021
Supply Pressure **kPag**	**psig**																												
6.9	1	0.0013	0.0023	0.0033	0.0045	0.0057	0.0072	0.0095	0.0106	0.0129	0.0144	0.0163	0.0189	0.0208	0.0254	0.0276	0.0303	0.033	0.036	0.042	0.045	0.049	0.053	0.061	0.064	0.068	0.072	0.083	0.091	0.095
13.8	2	0.0019	0.0033	0.0046	0.0064	0.0080	0.0102	0.0134	0.0150	0.0182	0.0203	0.0230	0.0268	0.0294	0.0359	0.0391	0.0428	0.047	0.051	0.059	0.064	0.070	0.075	0.086	0.091	0.096	0.102	0.118	0.128	0.134
20.7	3	0.0023	0.0040	0.0056	0.0079	0.0098	0.0125	0.0164	0.0184	0.0223	0.0249	0.0282	0.0328	0.0361	0.0439	0.0479	0.0525	0.058	0.063	0.072	0.079	0.085	0.092	0.105	0.111	0.118	0.125	0.144	0.157	0.164
27.6	4	0.0026	0.0046	0.0065	0.0091	0.0114	0.0144	0.0189	0.0212	0.0257	0.0288	0.0326	0.0379	0.0416	0.0507	0.0553	0.0606	0.067	0.073	0.083	0.091	0.098	0.106	0.121	0.129	0.136	0.144	0.167	0.182	0.189
34.5	5	0.0030	0.0052	0.0073	0.0102	0.0127	0.0161	0.0212	0.0237	0.0288	0.0322	0.0364	0.0423	0.0466	0.0567	0.0618	0.0677	0.074	0.081	0.093	0.102	0.110	0.119	0.135	0.144	0.152	0.161	0.186	0.203	0.212
41.4	6	0.0030	0.0052	0.0073	0.0102	0.0127	0.0161	0.0212	0.0237	0.0288	0.0322	0.0364	0.0423	0.0466	0.0567	0.0618	0.0677	0.074	0.081	0.093	0.102	0.110	0.119	0.135	0.144	0.152	0.161	0.186	0.203	0.212
48.3	7	0.0035	0.0061	0.0086	0.0120	0.0150	0.0190	0.0250	0.0280	0.0341	0.0381	0.0431	0.0501	0.0551	0.0671	0.0731	0.0801	0.088	0.096	0.110	0.120	0.130	0.140	0.160	0.170	0.180	0.190	0.220	0.240	0.250
55.2	8	0.0037	0.0065	0.0092	0.0128	0.0161	0.0203	0.0268	0.0300	0.0364	0.0407	0.0460	0.0535	0.0589	0.0717	0.0782	0.0857	0.094	0.103	0.118	0.128	0.139	0.150	0.171	0.182	0.193	0.203	0.236	0.257	0.268
62.1	9	0.0040	0.0069	0.0098	0.0136	0.0170	0.0216	0.0284	0.0318	0.0386	0.0432	0.0488	0.0568	0.0625	0.0761	0.0829	0.0908	0.100	0.109	0.125	0.136	0.148	0.159	0.182	0.193	0.204	0.216	0.250	0.273	0.284
69.0	10	0.0042	0.0073	0.0103	0.0144	0.0180	0.0227	0.0299	0.0335	0.0407	0.0455	0.0515	0.0599	0.0658	0.0802	0.0874	0.0958	0.105	0.115	0.132	0.144	0.156	0.168	0.192	0.203	0.215	0.227	0.263	0.287	0.299
103.4	15	0.0051	0.0089	0.0126	0.0176	0.0220	0.0279	0.0367	0.0411	0.0498	0.0557	0.0630	0.0733	0.0806	0.0982	0.1070	0.1173	0.129	0.141	0.161	0.176	0.191	0.205	0.235	0.249	0.264	0.279	0.323	0.352	0.367
137.9	20	0.0059	0.0103	0.0146	0.0203	0.0254	0.0322	0.0423	0.0474	0.0576	0.0643	0.0728	0.0846	0.0931	0.1134	0.1236	0.1354	0.149	0.163	0.186	0.203	0.220	0.237	0.271	0.288	0.305	0.322	0.372	0.406	0.423
206.9	30	0.0073	0.0126	0.0178	0.0249	0.0311	0.0394	0.0518	0.0581	0.0705	0.0788	0.0892	0.1037	0.1140	0.1389	0.1514	0.1659	0.182	0.199	0.228	0.249	0.270	0.290	0.332	0.352	0.373	0.394	0.456	0.498	0.518
275.8	40	0.0084	0.0146	0.0206	0.0287	0.0359	0.0455	0.0599	0.0670	0.0814	0.0910	0.1029	0.1197	0.1317	0.1604	0.1748	0.1915	0.211	0.230	0.263	0.287	0.311	0.335	0.383	0.407	0.431	0.455	0.527	0.575	0.599
344.8	50	0.0094	0.0163	0.0230	0.0321	0.0402	0.0509	0.0669	0.0749	0.0910	0.1017	0.1151	0.1338	0.1472	0.1793	0.1954	0.2141	0.236	0.257	0.294	0.321	0.348	0.375	0.428	0.455	0.482	0.509	0.589	0.642	0.669
413.7	60	0.0103	0.0179	0.0252	0.0352	0.0440	0.0557	0.0733	0.0821	0.0997	0.1114	0.1261	0.1466	0.1613	0.1965	0.2140	0.2346	0.258	0.281	0.323	0.352	0.381	0.411	0.469	0.498	0.528	0.557	0.645	0.704	0.733
482.7	70	0.0111	0.0193	0.0272	0.0380	0.0475	0.0602	0.0792	0.0887	0.1077	0.1203	0.1362	0.1584	0.1742	0.2122	0.2312	0.2534	0.279	0.304	0.348	0.380	0.412	0.443	0.507	0.538	0.570	0.602	0.697	0.760	0.792
551.6	80	0.0119	0.0207	0.0291	0.0406	0.0508	0.0643	0.0846	0.0948	0.1151	0.1287	0.1456	0.1693	0.1862	0.2268	0.2472	0.2709	0.298	0.325	0.372	0.406	0.440	0.474	0.542	0.576	0.609	0.643	0.745	0.813	0.846
620.6	90	0.0126	0.0219	0.0309	0.0431	0.0539	0.0682	0.0898	0.1006	0.1221	0.1365	0.1544	0.1796	0.1975	0.2406	0.2622	0.2873	0.316	0.345	0.395	0.431	0.467	0.503	0.575	0.610	0.646	0.682	0.790	0.862	0.898
689.5	100	0.0132	0.0231	0.0326	0.0454	0.0568	0.0719	0.0946	0.1060	0.1287	0.1438	0.1628	0.1893	0.2082	0.2536	0.2763	0.3028	0.333	0.363	0.416	0.454	0.492	0.530	0.606	0.644	0.681	0.719	0.833	0.908	0.946

Orifice Diameter Inches	0.035	0.037	0.038	0.039	0.04	0.041	0.042	0.043	0.047	0.052	0.055	0.06	0.063	0.067	0.07	0.073	0.076	0.079	0.081	0.086	0.089	0.094	0.096	0.1	0.104	0.109	0.113	0.12	0.125
mm	0.89	0.94	0.97	0.99	1.02	1.04	1.07	1.09	1.19	1.32	1.4	1.52	1.6	1.7	1.78	1.85	1.93	2.01	2.06	2.18	2.26	2.39	2.44	2.54	2.64	2.77	2.87	3.05	3.18
Size Number	**35**	**37**	**38**	**39**	**40**	**41**	**42**	**43**	**47**	**52**	**55**	**60**	**63**	**67**	**70**	**73**	**76**	**79**	**81**	**86**	**89**	**94**	**96**	**100**	**104**	**109**	**113**	**120**	**125**
C_V	0.028	0.031	0.032	0.033	0.036	0.038	0.039	0.041	0.048	0.059	0.068	0.081	0.088	0.1	0.11	0.12	0.13	0.14	0.15	0.17	0.18	0.2	0.21	0.23	0.25	0.27	0.31	0.34	0.37
K_V	0.024	0.026	0.027	0.028	0.031	0.032	0.033	0.035	0.041	0.05	0.058	0.069	0.075	0.085	0.094	0.1	0.11	0.12	0.13	0.145	0.15	0.17	0.18	0.2	0.21	0.23	0.26	0.29	0.32
Supply Pressure **kPag**	**psig**																												
6.9	1	0.106	0.117	0.121	0.125	0.136	0.144	0.148	0.155	0.182	0.223	0.257	0.307	0.333	0.379	0.416	0.454	0.492	0.530	0.568	0.644	0.681	0.757	0.795	0.871	0.946	1.022	1.173	1.287	1.401
13.8	2	0.150	0.166	0.171	0.177	0.193	0.203	0.209	0.219	0.257	0.316	0.364	0.434	0.471	0.535	0.589	0.642	0.696	0.749	0.803	0.910	0.964	1.071	1.124	1.231	1.338	1.445	1.660	1.820	1.981
20.7	3	0.184	0.203	0.210	0.216	0.236	0.249	0.256	0.269	0.315	0.387	0.446	0.531	0.577	0.656	0.721	0.787	0.852	0.918	0.983	1.115	1.180	1.311	1.377	1.508	1.639	1.770	2.033	2.229	2.426
27.6	4	0.212	0.235	0.242	0.250	0.273	0.288	0.295	0.310	0.363	0.447	0.515	0.613	0.666	0.757	0.833	0.908	0.984	1.06	1.136	1.287	1.363	1.514	1.59	1.741	1.893	2.044	2.347	2.574	2.801
34.5	5	0.237	0.262	0.271	0.279	0.305	0.322	0.330	0.347	0.406	0.499	0.576	0.686	0.745	0.846	0.931	1.016	1.100	1.185	1.27	1.439	1.524	1.693	1.778	1.947	2.116	2.285	2.624	2.878	3.132
41.4	6	0.260	0.287	0.297	0.306	0.334	0.352	0.362	0.38	0.445	0.547	0.631	0.751	0.816	0.927	1.020	1.113	1.205	1.298	1.391	1.576	1.669	1.854	1.947	2.133	2.318	2.504	2.874	3.153	3.431
48.3	7	0.280	0.310	0.320	0.331	0.361	0.381	0.391	0.411	0.481	0.591	0.681	0.811	0.881	1.002	1.102	1.202	1.302	1.402	1.502	1.703	1.803	2.003	2.103	2.304	2.504	2.704	3.105	3.405	3.706
55.2	8	0.300	0.332	0.343	0.353	0.385	0.407	0.418	0.439	0.514	0.632	0.728	0.867	0.942	1.071	1.178	1.285	1.392	1.499	1.606	1.82	1.927	2.141	2.248	2.463	2.677	2.891	3.319	3.64	3.961
62.1	9	0.318	0.352	0.363	0.375	0.409	0.432	0.443	0.466	0.545	0.67	0.772	0.920	0.999	1.136	1.249	1.363	1.476	1.59	1.703	1.931	2.044	2.271	2.385	2.612	2.839	3.066	3.52	3.861	4.202
69.0	10	0.335	0.371	0.383	0.395	0.431	0.455	0.467	0.491	0.575	0.706	0.814	0.970	1.053	1.197	1.317	1.436	1.556	1.676	1.796	2.035	2.155	2.394	2.514	2.753	2.993	3.232	3.711	4.070	4.429
103.4	15	0.411	0.454	0.469	0.484	0.528	0.557	0.572	0.601	0.704	0.865	0.997	1.188	1.290	1.466	1.613	1.759	1.906	2.053	2.199	2.492	2.639	2.932	3.079	3.372	3.665	3.958	4.545	4.985	5.424
137.9	20	0.474	0.525	0.542	0.559	0.609	0.643	0.660	0.694	0.813	0.999	1.151	1.371	1.490	1.693	1.862	2.031	2.201	2.370	2.539	2.878	3.047	3.386	3.555	3.894	4.232	4.571	5.248	5.756	6.264
206.9	30	0.581	0.643	0.663	0.684	0.746	0.788	0.809	0.850	0.995	1.223	1.41	1.679	1.825	2.073	2.281	2.488	2.695	2.903	3.110	3.525	3.732	4.147	4.354	4.769	5.183	5.598	6.427	7.049	7.671
275.8	40	0.67	0.742	0.766	0.79	0.862	0.910	0.934	0.982	1.149	1.413	1.628	1.939	2.107	2.394	2.634	2.873	3.112	3.352	3.591	4.070	4.309	4.788	5.028	5.506	5.985	6.464	7.422	8.140	8.858
344.8	50	0.749	0.83	0.857	0.883	0.964	1.017	1.044	1.097	1.285	1.579	1.820	2.168	2.355	2.677	2.944	3.212	3.480	3.747	4.015	4.550	4.818	5.353	5.621	6.156	6.692	7.227	8.298	9.101	9.904
413.7	60	0.821	0.909	0.938	0.968	1.056	1.114	1.144	1.202	1.407	1.730	1.994	2.375	2.580	2.932	3.225	3.519	3.812	4.105	4.398	4.985	5.278	5.864	6.158	6.744	7.33	7.917	9.09	9.969	10.849
482.7	70	0.887	0.982	1.013	1.045	1.140	1.203	1.235	1.299	1.520	1.869	2.154	2.565	2.787	3.167	3.484	3.801	4.117	4.434	4.751	5.384	5.701	6.334	6.651	7.284	7.918	8.551	9.818	10.768	11.718
551.6	80	0.948	1.050	1.083	1.117	1.219	1.287	1.320	1.388	1.625	1.998	2.302	2.742	2.979	3.386	3.724	4.063	4.401	4.74	5.079	5.756	6.094	6.772	7.110	7.787	8.464	9.142	10.496	11.512	12.527
620.6	90	1.006	1.113	1.149	1.185	1.293	1.365	1.401	1.472	1.724	2.119	2.442	2.909	3.16	3.591	3.95	4.309	4.668	5.028	5.387	6.105	6.464	7.182	7.541	8.260	8.978	9.696	11.133	12.210	13.287
689.5	100	1.060	1.173	1.211	1.249	1.363	1.438	1.476	1.552	1.817	2.233	2.574	3.066	3.331	3.785	4.164	4.542	4.921	5.3	5.678	6.435	6.814	7.571	7.949	8.706	9.464	10.221	11.735	12.870	14.006

O'Keefe Controls Co. P.O. BOX Q • TRUMBULL, CONNECTICUT 06611 • CT PHONE (203) 261-6711 • TOLL FREE PHONE (800) 533-3285 • FAX (203) 261-8331
© O'KEEFE CONTROLS CO. • 2008 ALL RIGHTS RESERVED • e-mail ca@okcc.com • website www.okcc.com