# Economy Line

# Miniature Check Valves

This catalog has been superseded by the online catalog at www.okeefecontrols.com and is available for historical reference only

## Construction
## or
## Resilient Seating

## Inch or Metric Threads

O'Keefe Controls Co.

CATALOG TCV-1

MONROE, CT

# Economy Line -Check Valve

## Inch Threads

## Description

This miniature check valve line employs a free floating stainless steel or elastomeric ball, which allows free flow in one direction; reverse flow is prevented. The valves are suitable for air, water, inert gases, light oil and liquids compatible with the materials of construction. The valves are fast acting and are suitable for long life applications.

## Features

- All metal construction option
- Long life operation
- Low cost

## Symbol-Check Valve

## General Specifications

**Materials of Construction**

Body – Brass or 303 SS

Ball Stop – Brass or 303 SS

Ball –Material options:

| Size | 440C-SS (SS) | Viton (V) | Buna-N (BN) |
|---|---|---|---|
| 6/32 | ✓ | | |
| 10/32 | ✓ | | ✓ |
| 1/4•20 | ✓ | ✓ | |
| 5/16•18 | ✓ | ✓ | ✓ |

**Maximum Temperature**

Buna-N Ball – 150°F

Viton Ball- 250°F

440C SS Ball – 300°F

**Seat Leakage**

SS Ball

20 sccm (max) air flow at 25 psig

Elastomeric Ball

0 sccm @ 50 psig (air flow)

<1 sccm @ 25 psig (air flow)

**Flow Capacity (air flow)**

| Type | Size | $C_V$ | (SLPM) @50 PSIG |
|---|---|---|---|
| ZC | 6/32 | .009 | 9 |
| ZC | 10/32 | .020 | 20 |
| ZC | 1/4•20 | .080 | 80 |
| ZC | 5/16•18 | .120 | 130 |

**Thread Sealant**

For type ZC straight threads use Loctite 542 thread sealant or equal.

**Type ZC**

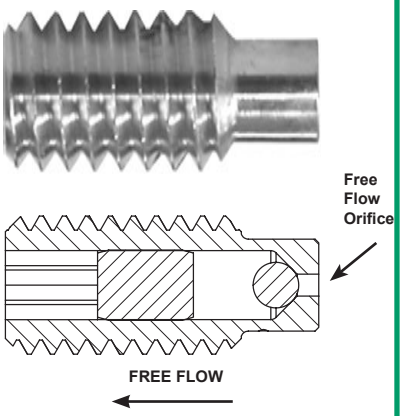


**Dimension Drawings**

See Page 8

**Orientation**

•Nose down or horizontal installation
Preferred orientation

•Nose up installation MOPD*:
25 psid --SS ball
10 psid ----Elastomeric ball

*Minimum Operating Pressure Differential*

**Maximum Operating Pressure**

Type ZC

Brass Body– 500 psig (SS Ball)

SS Body– 1000 psig (SS Ball)

Brass or SS Body –
125 psig (Elastomeric Ball)

## Part Number

The part number consists of:

| Type | Orifice Size No. | Cracking Pressure | Thread Size | Body Material[1] | Ball Material[1] | Part No. |
|---|---|---|---|---|---|---|
| ZC (All) | (Fixed) | 0 (All) | (Select) | (Select) | (Select) | (Listed Below) |
| Example Part Numbers | | | | | | |
| ZC | 20 | 0 | 6/32 | BR | SS | *ZC-20-0-6/32-BR-SS* |
| ZC | 31 | 0 | 10/32 | SS | BN | *ZC-31-0-10/32-SS-BN* |
| ZC | 62 | 0 | 1/4•20 | BR | V | *ZC-62-0-1/4•20-BR-V* |
| ZC | 94 | 0 | 5/16•18 | SS | SS | *ZC-94-0-5/16•18-SS-SS* |

[1]BR-Brass, SS-Stainless Steel, BN-Buna - N, V-Viton

O'Keefe Controls Co.
P.O. BOX Q • TRUMBULL, CT 06611 • CT PHONE (203) 261-6711 • TOLL FREE PHONE (800) 533-3285 • FAX (203) 261-8331
e-mail ca@okcc.com • website www.okcc.com

© O'KEEFE CONTROLS CO. • 2010 ALL RIGHTS RESERVED

# Metric Threads

## Description

This metric miniature check valve line is much the same as the "inch" product line, differing only in the thread sizes offered; M3.5, M5, M6 and M8. Selection includes body material, ball material, and thread size. The ball is free floating which allows for zero cracking pressure.

## Features

- All metal construction option
- Long life operation
- Low cost

## Symbol-Check Valve

## General Specifications

**Materials of Construction**

Body – Brass or 303 SS

Ball Stop – Brass or 303 SS

Ball – Material options:

| Size | 440C-SS (SS) | Flouro-carbon (V) | Nitrile (BN) |
|---|---|---|---|
| M3.5 | ✓ | | |
| M5 | ✓ | | ✓ |
| M6 | ✓ | ✓ | |
| M8 | ✓ | ✓ | ✓ |

**Maximum Temperature**

Nitrile Ball – 65°C

Flourocarbon Ball- 120°C

440C SS Ball – 150°C

**Seat Leakage**

SS Ball

20 sccm (max) air flow at 175 kPa

Elastomeric Ball

0 sccm @ 350 kPa (air flow)

<1 sccm @ 175 kPa (air flow)

**Flow Capacity (air flow)**

| Type | Size | $K_V$ | (SLPM) @350 kPa |
|---|---|---|---|
| ZMC | M3.5 | .008 | 9 |
| ZMC | M5 | .017 | 20 |
| ZMC | M6 | .065 | 80 |
| ZMC | M8 | .100 | 130 |

**Thread Sealant**

For type ZMC straight threads use Loctite 542 thread sealant or equal.

**Type ZMC**

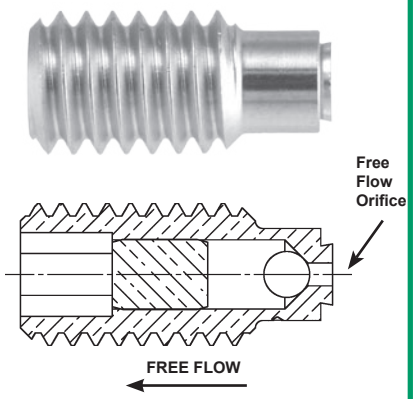


**Dimension Drawings**

See Page 8

**Orientation**

•Nose down or horizontal installation
Preferred orientation

•Nose up installation MOPD*:
175 kPa --SS ball
75 kPa --Elastomeric ball

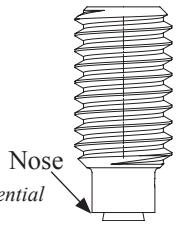


*Minimum Operating Pressure Differential*

**Maximum Operating Pressure**

Type ZMC

Brass Body– 3500 kPa (SS Ball)

SS Body– 7000 kPa (SS Ball)

Brass or SS Body-
875 kPa (Elastomeric Ball)

## Part Number

The part number consists of:

| Type | Orifice Size No. | Cracking Pressure | Thread Size | Body Material[1] | Ball Material[1] | Part No. |
|---|---|---|---|---|---|---|
| ZMC (All) | (Fixed) | 0 (All) | (Select) | (Select) | (Select) | (Listed Below) |
| Example Part Numbers | | | | | | |
| ZMC | 20 | 0 | M3.5 | BR | SS | *ZMC-20-0-M3.5-BR-SS* |
| ZMC | 31 | 0 | M5 | SS | BN | *ZMC-31-0-M5-SS-BN* |
| ZMC | 62 | 0 | M6 | BR | V | *ZMC-62-0-M6-BR-V* |
| ZMC | 94 | 0 | M8 | SS | SS | *ZMC-94-0-M8-SS-SS* |

[1]BR-Brass, SS-Stainless Steel, BN-Nitrile, V-Fluorocarbon

O'Keefe Controls Co.

P.O. BOX Q • TRUMBULL, CT 06611 • CT PHONE (203) 261-6711 • TOLL FREE PHONE (800) 533-3285 • FAX (203) 261-8331

© O'KEEFE CONTROLS CO. • 2010 ALL RIGHTS RESERVED

e-mail ca@okcc.com • website www.okcc.com

# Economy Line -Checked Orifices

## Inch Threads

| Orifice Size No. | Thread Size | | | |
|---|---|---|---|---|
| | 6/32 | 10/32 | 1/4•20 | 5/16•18 |
| | Orifice Diameter - Inches | | | |
| 4 | 0.004 | 0.004 | 0.004 | 0.004 |
| 5 | 0.005 | 0.005 | 0.005 | 0.005 |
| 6 | 0.006 | 0.006 | 0.006 | 0.006 |
| 7 | 0.007 | 0.007 | 0.007 | 0.007 |
| 8 | 0.008 | 0.008 | 0.008 | 0.008 |
| 9 | 0.009 | 0.009 | 0.009 | 0.009 |
| 10 | 0.010 | 0.010 | 0.010 | 0.010 |
| 11 | 0.011 | 0.011 | 0.011 | 0.011 |
| 12 | 0.012 | 0.012 | 0.012 | 0.012 |
| 13 | 0.013 | 0.013 | 0.013 | 0.013 |
| 14 | 0.014 | 0.014 | 0.014 | 0.014 |
| 15 | 0.015 | 0.015 | 0.015 | 0.015 |
| 16 | 0.016 | 0.016 | 0.016 | 0.016 |
| 17 | 0.017 | 0.017 | 0.017 | 0.017 |
| 18 | 0.018 | 0.018 | 0.018 | 0.018 |
| 19 | 0.019 | 0.019 | 0.019 | 0.019 |
| 20 | | 0.020 | 0.020 | 0.020 |
| 21 | | 0.021 | 0.021 | 0.021 |
| 22 | | 0.022 | 0.022 | 0.022 |
| 23 | | 0.023 | 0.023 | 0.023 |
| 24 | | 0.024 | 0.024 | 0.024 |
| 25 | | 0.025 | 0.025 | 0.025 |
| 26 | | 0.026 | 0.026 | 0.026 |
| 27 | | 0.027 | 0.027 | 0.027 |
| 28 | | 0.028 | 0.028 | 0.028 |
| 29 | | 0.029 | 0.029 | 0.029 |
| 31 | | | 0.031 | 0.031 |
| 32 | | | 0.032 | 0.032 |
| 33 | | | 0.033 | 0.033 |
| 35 | | | 0.035 | 0.035 |
| 37 | | | 0.037 | 0.037 |
| 38 | | | 0.038 | 0.038 |
| 39 | | | 0.039 | 0.039 |
| 40 | | | 0.040 | 0.040 |
| 41 | | | 0.041 | 0.041 |
| 42 | | | 0.042 | 0.042 |
| 43 | | | 0.043 | 0.043 |
| 47 | | | 0.047 | 0.047 |
| 52 | | | | 0.052 |
| 55 | | | | 0.055 |
| 60 | | | | 0.060 |
| 63 | | | | 0.063 |
| 67 | | | | 0.067 |
| 70 | | | | 0.070 |
| 73 | | | | 0.073 |
| 76 | | | | 0.076 |
| 79 | | | | 0.079 |
| 81 | | | | 0.081 |

## Description

A checked orifice consists of a series arrangement of a check valve and a selectable fixed orifice. Size selection is from the table to the left.

### Symbol Checked Orifice

### Type ZCR

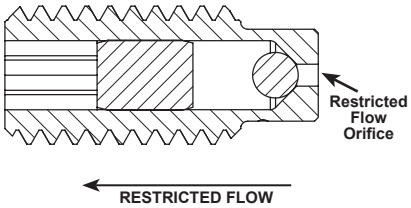


## General Specifications

**Materials of Construction**

Body – Brass or 303 SS

Ball Stop – Brass or 303 SS

Ball – Material options:

| Size | 440C-SS (SS) | Viton (V) | Buna-N (BN) |
|---|---|---|---|
| 6/32 | ✓ | | |
| 10/32 | ✓ | | ✓ |
| 1/4•20 | ✓ | ✓ | |
| 5/16•18 | ✓ | ✓ | ✓ |

**Seat Leakage**

SS Ball

20 sccm (max) air flow at 25 psig

Elastomeric Ball

0 sccm @ 50 psig (air flow)

<1 sccm @ 25 psig (air flow)

**Thread Sealant**

For type ZCR straight threads use Loctite 542 thread sealant or equal.

**Flow Capacity (air flow)**

Determined by orifice size

**Maximum Temperature**

Buna-N Ball – 150°F

Viton Ball- 250°F

440C SS Ball – 300°F

**Drawing Dimensions**

See page 8.

**Maximum Operating Pressure**

Brass body/SS ball 500 psig

SS body / SS ball 1000 psig

Elastomeric Ball 125 psig

**Orientation**

•Nose down or horizontal installation
Preferred orientation

•Nose up installation
Test for application

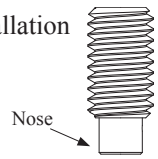


## Part Number

The part number consists of:

| Type | Orifice Size No. | Cracking Pressure | Thread Size | Body Material[1] | Ball Material[1] | Part No. |
|---|---|---|---|---|---|---|
| ZCR (All) | (Fixed) | 0 (All) | (Select) | (Select) | (Select) | (Listed Below) |
| Example Part Numbers | | | | | | |
| ZCR | 12 | 0 | 6/32 | BR | SS | *ZCR-12-0-6/32-BR-SS* |
| ZCR | 27 | 0 | 10/32 | SS | BN | *ZCR-27-0-10/32-SS-BN* |
| ZCR | 52 | 0 | 1/4•20 | BR | V | *ZCR-52-0-1/4•20-BR-V* |
| ZCR | 81 | 0 | 5/16•18 | SS | SS | *ZCR-81-0-5/16•18-SS-SS* |

[1]BR-Brass, SS-Stainless Steel, BN-Buna - N, V-Viton

O'Keefe Controls Co.
P.O. BOX Q • TRUMBULL, CT 06611 • CT PHONE (203) 261-6711 • TOLL FREE PHONE (800) 533-3285 • FAX (203) 261-8331

© O'KEEFE CONTROLS CO. • 2010 ALL RIGHTS RESERVED

e-mail ca@okcc.com • website www.okcc.com

# Metric Threads

| Orifice Size No. | Thread Size | | | |
|---|---|---|---|---|
| | M3.5 | M5 | M6 | M8 |
| | Orifice Diameter - mm | | | |
| 4 | 0.1 | 0.1 | 0.1 | 0.1 |
| 5 | 0.13 | 0.13 | 0.13 | 0.13 |
| 6 | 0.15 | 0.15 | 0.15 | 0.15 |
| 7 | 0.18 | 0.18 | 0.18 | 0.18 |
| 8 | 0.20 | 0.20 | 0.20 | 0.20 |
| 9 | 0.23 | 0.23 | 0.23 | 0.23 |
| 10 | 0.25 | 0.25 | 0.25 | 0.25 |
| 11 | 0.28 | 0.28 | 0.28 | 0.28 |
| 12 | 0.30 | 0.30 | 0.30 | 0.30 |
| 13 | 0.33 | 0.33 | 0.33 | 0.33 |
| 14 | 0.36 | 0.36 | 0.36 | 0.36 |
| 15 | 0.38 | 0.38 | 0.38 | 0.38 |
| 16 | 0.41 | 0.41 | 0.41 | 0.41 |
| 17 | 0.43 | 0.43 | 0.43 | 0.43 |
| 18 | 0.46 | 0.46 | 0.46 | 0.46 |
| 19 | 0.48 | 0.48 | 0.48 | 0.48 |
| 20 | | 0.51 | 0.51 | 0.51 |
| 21 | | 0.53 | 0.53 | 0.53 |
| 22 | | 0.56 | 0.56 | 0.56 |
| 23 | | 0.58 | 0.58 | 0.58 |
| 24 | | 0.61 | 0.61 | 0.61 |
| 25 | | 0.64 | 0.64 | 0.64 |
| 26 | | 0.66 | 0.66 | 0.66 |
| 27 | | 0.69 | 0.69 | 0.69 |
| 28 | | 0.71 | 0.71 | 0.71 |
| 29 | | 0.74 | 0.74 | 0.74 |
| 31 | | | 0.79 | 0.79 |
| 32 | | | 0.81 | 0.81 |
| 33 | | | 0.84 | 0.84 |
| 35 | | | 0.89 | 0.89 |
| 37 | | | 0.94 | 0.94 |
| 38 | | | 0.97 | 0.97 |
| 39 | | | 0.99 | 0.99 |
| 40 | | | 1.02 | 1.02 |
| 41 | | | 1.04 | 1.04 |
| 42 | | | 1.07 | 1.07 |
| 43 | | | 1.09 | 1.09 |
| 47 | | | 1.19 | 1.19 |
| 52 | | | | 1.32 |
| 55 | | | | 1.40 |
| 60 | | | | 1.52 |
| 63 | | | | 1.60 |
| 67 | | | | 1.70 |
| 70 | | | | 1.78 |
| 73 | | | | 1.85 |
| 76 | | | | 1.93 |
| 79 | | | | 2.01 |
| 81 | | | | 2.06 |

## Description

A checked orifice consists of a series arrangement of a check valve and a selectable fixed orifice. Size selection is from the table to the left.

### Symbol Checked Orifice

### Type ZMCR

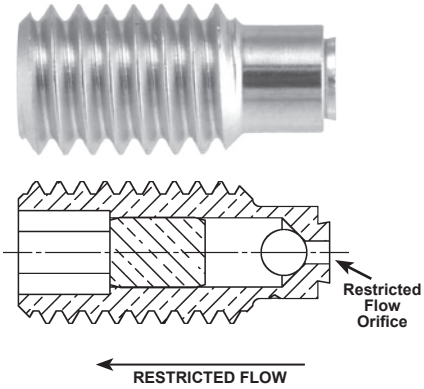


## General Specifications

**Materials of Construction**

Body – Brass or 303 SS

Ball Stop – Brass or 303 SS

Ball – Material options:

| Size | 440C-SS (SS) | Fluoro-carbon (V) | Nitrile (BN) |
|---|---|---|---|
| M3.5 | ✓ | | |
| M5 | ✓ | | ✓ |
| M6 | ✓ | ✓ | |
| M8 | ✓ | ✓ | ✓ |

**Seat Leakage**

SS Ball

20 sccm (max) air flow at 175 kPa

Elastomeric Ball

0 sccm @ 350 kPa (air flow)

<1 sccm @ 175 kPa (air flow)

**Thread Sealant**

For type ZMCR straight threads use Loctite 542 thread sealant or equal.

**Flow Capacity (air flow)**

Determined by orifice size

**Drawing Dimensions**

See page 8.

**Maximum Temperature**

Nitrile Ball – 65°C

Fluorocarbon Ball- 120°C

440C SS Ball – 150°C

**Maximum Operating Pressure**

Type ZMC

Brass Body– 3500 kPa (SS Ball)

SS Body– 7000 kPa (SS Ball)

Brass or SS Body

– 875 kPa (Elastomeric Ball)

**Orientation**

•Nose down or horizontal installation
Preferred orientation

•Nose up installation
Test for application

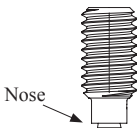


## Part Number

The part number consists of:

| Type | Orifice Size No. | Cracking Pressure | Thread Size | Body Material[1] | Ball Material[1] | Part No. |
|---|---|---|---|---|---|---|
| ZMCR | | 0 | | | | |
| (All) | (Fixed) | (All) | (Select) | (Select) | (Select) | (Listed Below) |
| Example Part Numbers | | | | | | |
| ZMCR | 10 | 0 | M3.5 | BR | SS | *ZMCR-10-0-M3.5-BR-SS* |
| ZMCR | 25 | 0 | M5 | SS | BN | *ZMCR-25-0-M5-SS-BN* |
| ZMCR | 47 | 0 | M6 | BR | V | *ZMCR-47-0-M6-BR-V* |
| ZMCR | 73 | 0 | M8 | SS | SS | *ZMCR-73-0-M8-SS-SS* |

[1]BR-Brass, SS-Stainless Steel, BN-Nitrile, V-Fluorocarbon

O'Keefe Controls Co.
P.O. BOX Q • TRUMBULL, CT 06611 • CT PHONE (203) 261-6711 • TOLL FREE PHONE (800) 533-3285 • FAX (203) 261-8331
e-mail ca@okcc.com • website www.okcc.com

© O'KEEFE CONTROLS CO. • 2010 ALL RIGHTS RESERVED

# Economy Line Adapter - Check Valves, Checked Orifices

## 10/32 or M5 Threads

## Description

This adapter is a male/female check valve with threads 10/32(inch) or M5 (metric). It has an integral viton (flourocarbon) seal and is available in brass or stainless steal.

Types FMCR, FMMCR

| Orifice Size No. | Thread Size | |
|---|---|---|
| | 10/32 | M5 |
| | Orifice Diameter - 10/32 Inches M5 mm | |
| 4 | 0.004 | 0.10 |
| 5 | 0.005 | 0.13 |
| 6 | 0.006 | 0.15 |
| 7 | 0.007 | 0.18 |
| 8 | 0.008 | 0.20 |
| 9 | 0.009 | 0.23 |
| 10 | 0.010 | 0.25 |
| 11 | 0.011 | 0.28 |
| 12 | 0.012 | 0.30 |
| 13 | 0.013 | 0.33 |
| 14 | 0.014 | 0.36 |
| 15 | 0.015 | 0.38 |
| 16 | 0.016 | 0.41 |
| 17 | 0.017 | 0.43 |
| 18 | 0.018 | 0.46 |
| 19 | 0.019 | 0.48 |
| 20 | 0.020 | 0.51 |
| 21 | 0.021 | 0.53 |
| 22 | 0.022 | 0.56 |
| 23 | 0.023 | 0.58 |
| 24 | 0.024 | 0.61 |
| 25 | 0.025 | 0.64 |
| 26 | 0.026 | 0.66 |
| 27 | 0.027 | 0.69 |
| 28 | 0.028 | 0.71 |
| 29 | 0.029 | 0.74 |

## General Specifications

**Materials of Construction**

Body – Brass or 303 SS
Ball Stop – Brass or 303 SS
Ball – Stainless Steel (SS) or
Buna-N (nitrile) (BN)
Seal - Viton (Fluorocarbon)

**Maximum Temperature**

SS Ball – 250°F (120°C)
Buna-N Ball – 150°F (65°C)

**Seat Leakage**

SS Ball
20 sccm (max) air flow at 25 psig
Buna-N Ball
0 sccm @ 50 - 125psig (air flow)
<20 sccm up to 50 psig (air flow)

**Flow Capacity -Basic Check Valve**

FMC (10/32) $C_V$ = .02
FMMC (M5) $K_V$ = .017

**Flow Capacity - Checked Orifice**

FMCR (10/32) and FMMCR varies with orifice size selected.
Test for performance

**Orientation**

•Male thread down or horizontal installation
Preferred orientation

•Male thread up installation
Test for application

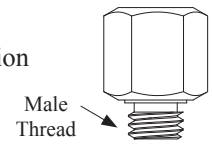


**Types FMC, FMCR, FMMC, FMMCR**

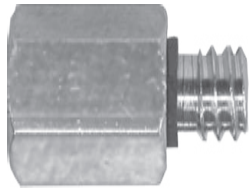

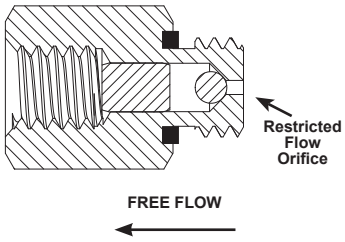


**Drawing Dimensions**

See page 8.

**Maximum Pressure**

Brass body/SS ball 125 psig (875 kPa)
SS body / SS ball 125 psig (875 kPa)
Elastomeric Ball 125 psig (875 kPa)

### Symbols

Check Valve

Checked Orifice

## Part Number

The part number consists of:

| Type | Orifice Size No. | Cracking Pressure | Thread Size | Body Material[1] | Ball Material[1] | Part No. |
|---|---|---|---|---|---|---|
| see below | 31 | 0 | | | | |
| (All) | (Fixed) | (All) | (Select) | (Select) | (Select) | (Listed Below) |
| Example Part Numbers | | | | | | |
| FMC | 31 | 0 | 10/32 | BR | SS | *FMC-31-0-10/32-BR-SS* |
| FMMC | 31 | 0 | M5 | SS | BN | *FMMC-31-0-M5-SS-BN* |
| FMCR | 10 | 0 | 10/32 | BR | BN | *FMCR-10-0-10/32-BR-BN* |
| FMMCR | 18 | 0 | M5 | SS | SS | *FMMCR-18-0-M5-SS-SS* |

[1]BR-Brass, SS-Stainless Steel, BN-Buna-N, V-Viton

O'Keefe Controls Co.
P.O. BOX Q • TRUMBULL, CT 06611 • CT PHONE (203) 261-6711 • TOLL FREE PHONE (800) 533-3285 • FAX (203) 261-8331
e-mail ca@okcc.com • website www.okcc.com

© O'KEEFE CONTROLS CO. • 2010 ALL RIGHTS RESERVED

# Inch or Metric Threads

## Description

Economy check valve assemblies with nose seals are used to eliminate thread leakage. O-rings are used to seal the nose end of the check valve when pressed against flat surface. There is a choice of Buna-N (Nitrile) or Viton (Fluorocarbon) seals. Refer to page 8 for installation instructions.

For development of part numbers please note color code use for selection of valve features.

## Specifications

**Maximum Temperature**

Buna-N (nitrile) 150°F (65°C)

Viton (Fluorocarbon) 250°F (120°C)

**General Specifications**

See corresponding pages 2,3,4,5

**Drawings and Installation**

See Page 8

**Ball Material options:**

303SS - all sizes

Buna-N (nitrile) - 10/32 (M5), 5/16•18 (M8)

Viton (fluorocarbon) 1/4•20 (M6) 5/16•18 (M8)

**Types: ZNBC, ZNVC, ZMNBC, and ZMNVC**

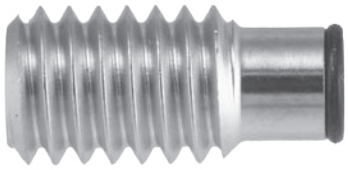

FREE FLOW

**Materials of Construction**

| | | |
|---|---|---|
| Body[5] – Brass | | -BR |
| | - 303 SS | -SS |
| Seal[1] | - Viton (Fluorocarbon) | V |
| | - Buna-N (nitrile) | B |
| Ball[6] | - 440C | -SS |
| | - Viton (Fluorocarbon) | V |
| | - Buna-N (nitrile) | -BN |

| | Types[1] | Description | Specification same as |
|---|---|---|---|
| Inch Threads | ZNBC | Check Valve/Buna N Seal | ZC see pg 2 |
| | ZNVC | Check Valve/Viton Seal | ZC see pg 2 |
| | ZNBCR | Checked Orifice/Buna N Seal | ZCR see pg 4 |
| | ZNVCR | Checked Orifice/Viton Seal | ZCR see pg 4 |

| | Thread Size | Thread Size Code[4] | Check Valve Orifice Size No.[2a] | Checked Orifice Size No.[2b] |
|---|---|---|---|---|
| Inch Threads | 6/32 | 6 | 20 | See Chart Page 4 |
| | 10/32 | 10 | 31 | |
| | 1/4•20 | 1/4 | 62 | |
| | 5/16•18 | 5/16 | 94 | |

| | Types[1] | Description | Specification same as |
|---|---|---|---|
| Metric Threads | ZMNBC | Check Valve/Buna N Seal | ZMC see pg 3 |
| | ZMNVC | Check Valve/Viton Seal | ZMC see pg 3 |
| | ZMNBCR | Checked Orifice/Buna N Seal | ZMCR see pg 5 |
| | ZMNVCR | Checked Orifice/Viton Seal | ZMCR see pg 5 |

| | Thread Size | Thread Size Code[4] | Check Valve Orifice Size No.[2a] | Checked Orifice Size No.[2b] |
|---|---|---|---|---|
| Metric Threads | M3.5x.6 mm | M3.5 | 20 | See Chart Page 5 |
| | M5x.6 mm | M5 | 31 | |
| | M6x.6 mm | M6 | 62 | |
| | M8x.6 mm | M8 | 94 | |

## Part Number

The part number consists of:

| | 1 Type | 2a or 2b Orifice Size No. | 3 Cracking Pressure | 4 Thread Size Code | 5 Body Material | 6 Ball Material | Assembly Part No. |
|---|---|---|---|---|---|---|---|
| Inch Threads | ZNBC | 31 | 0 | 10 | BR | BN | *ZNBC-31-0-10-BR-BN* |
| | ZNVC | 62 | 0 | 1/4 | SS | V | *ZNVC-62-0-1/4-SS-V* |
| | ZNBCR | 10* | 0 | 6 | BR | SS | *ZNBCR-10-0-6-BR-SS* |
| | ZNVCR | 25* | 0 | 5/16 | BR | V | *ZNVCR-25-0-5/16-BR-V* |
| Metric Threads | ZMNBC | 20 | 0 | M3.5 | SS | SS | *ZMNBC-20-0-M3.5-SS-SS* |
| | ZMNVC | 31 | 0 | M5 | SS | BN | *ZMNVC-31-0-M5-SS-BN* |
| | ZMNBCR | 42** | 0 | M6 | BR | SS | *ZMNBCR-42-0-M6-BR-SS* |
| | ZMNVCR | 69** | 0 | M8 | SS | V | *ZMNVCR-69-0-M8-SS-V* |

*See chart page 4 **See chart page 5

O'Keefe Controls Co.

P.O. BOX Q • TRUMBULL, CT 06611 • CT PHONE (203) 261-6711 • TOLL FREE PHONE (800) 533-3285 • FAX (203) 261-8331

© O'KEEFE CONTROLS CO. • 2010 ALL RIGHTS RESERVED

e-mail ca@okcc.com • website www.okcc.com

# Economy Line - Drawings

## Inch or Metric Threads

### Types: ZC, ZCR

Dimensions - inch

| Thread | L | $L_1$ | D | Hex |
|---|---|---|---|---|
| 6/32 | .310 | .088 | .060 | 1/16 |
| 10/32 | .425 | .105 | .125 | 3/32 |
| 1/4•20 | .500 | .150 | .175 | 1/8 |
| 5/16•18 | .640 | .190 | .220 | 5/32 |

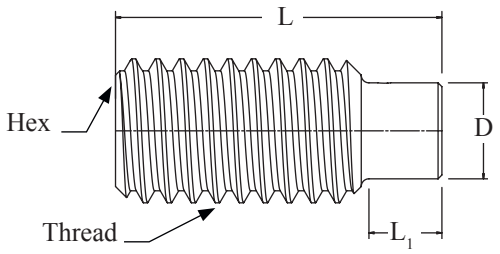


### Types: ZMC, ZMCR

Dimensions - mm

| Thread | L | $L_1$ | D | Hex |
|---|---|---|---|---|
| M3.5 | 7.87 | 1.97 | 2.29 | 2 |
| M5.0 | 10.8 | 2.57 | 3.10 | 2.5 |
| M6.0 | 12.7 | 3.81 | 4.45 | 3 |
| M8.0 | 16.3 | 4.83 | 5.59 | 4 |

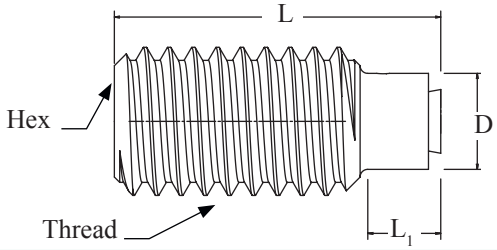


### Types: FMC, FMCR

(inches)

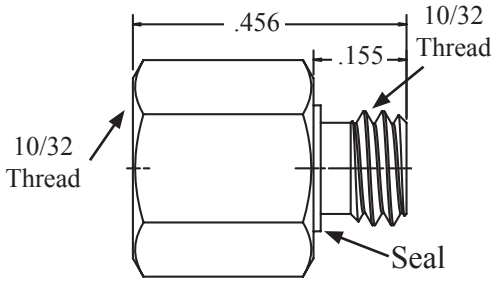


### Types: FMMC, FMMCR

(mm)

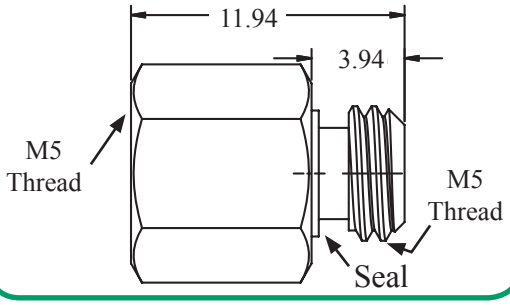


### Types: ZNVC, ZNVCR ZNBC, ZNBCR

Dimensions - inch

| Thread | L | $L_1$ | D | Hex |
|---|---|---|---|---|
| 6/32 | .310 | .088 | .090 | 1/16 |
| 10/32 | .425 | .105 | .125 | 3/32 |
| 1/4•20 | .500 | .150 | .175 | 1/8 |
| 5/16•18 | .640 | .190 | .220 | 5/32 |

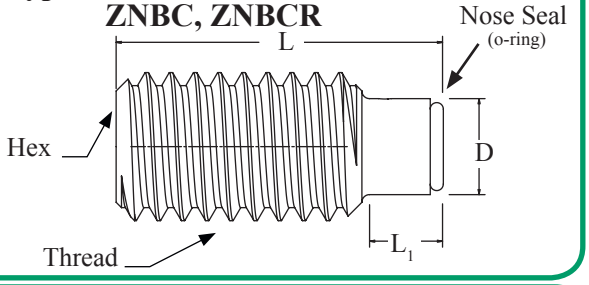


### Types: ZMNVC, ZMNVCR ZMNBC, ZMNBCR

Dimensions - mm

| Thread | L | $L_1$ | D | Hex |
|---|---|---|---|---|
| M3.5 | 7.87 | 2.24 | 2.29 | 2 |
| M5.0 | 10.8 | 2.67 | 3.18 | 2.5 |
| M6.0 | 12.7 | 3.81 | 4.45 | 3 |
| M8.0 | 16.3 | 4.83 | 5.59 | 4 |

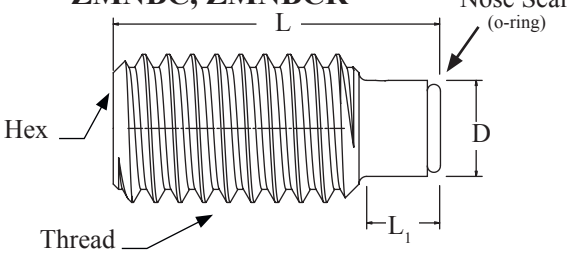


## Installation

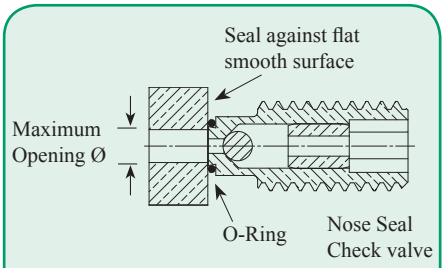


| Thread | | Maximum Opening Ø | |
|---|---|---|---|
| inches | mm | inches | mm |
| 6/32 | M3.5 x .6 | .047" | 1.26 |
| 10/32 | M5.0 x .8 | .070" | 1.57 |
| 1/4•20 | M6.0 x 1 | .093" | 2.41 |
| 5/16•18 | M8.0 x 1.25 | .125" | 3.18 |


O'Keefe Controls Co.

P.O. BOX Q • TRUMBULL, CT 06611 • CT PHONE (203) 261-6711 • TOLL FREE PHONE (800) 533-3285 • FAX (203) 261-8331



© O'KEEFE CONTROLS CO. • 2010 ALL RIGHTS RESERVED



e-mail ca@okcc.com • website www.okcc.com